HR862635H

Electrical Specification @25°C

RoHS Compliant (PB Free)
Operating Temperature Range: 0°C ~ +70°C
Isolation: 1500Vrms 0.5mA 60sec (J1~8 to P1~10)
OCL: 350uH Minimum @100KHz 100mV with 8mADC
Insertion Loss: −1.0dB Maximum @1MHz ~ 100MHz
Return Loss: −18dB Minimum @1MHz ~ 30MHz / −13.5dB Minimum @30MHz ~ 60MHz
−12dB Minimum @60MHz ~ 80MHz
Common Mode Rejection: −30dB Typical @1MHz ~ 50MHz
−20dB Typical @50MHz ~ 150MHz
Crosstalk: −40dB Typical @1MHz ~ 30MHz / −35dB Typical @30MHz ~ 60MHz
−30dB Typical @60MHz ~ 80MHz

Schematics

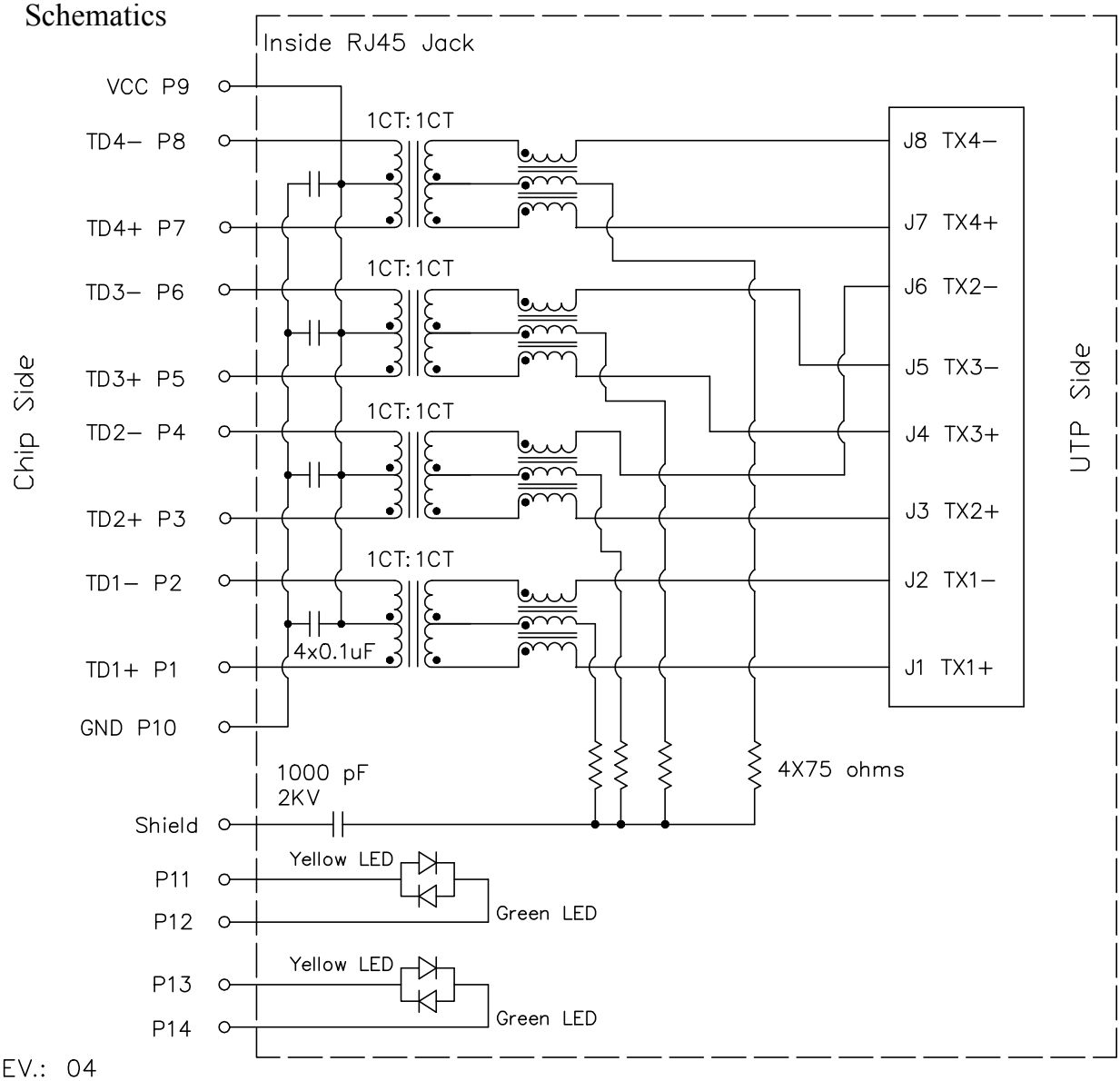

Address: No.16, Industrial Road Central, Industrial Zone, Xiaolan Town,
Zhongshan City, Guangdong Province, China
Tel: (021)64128995 https: //Ljq.hqelec.com

HR862635H

Commercial standards, specifications and Summary:

RoHS Compliant (Pb Free)
Meets or Exceeds IEEE802.3ab standards including 350uH Min OCL with 8mADC
High performance for EMI suppression, Crosstalk, Return Loss and Consistent Electrical
Minimum 2250VDC isolation per IEEE802.3 requirement
Minimize PCB space and Simplify PCB Layout
Less magnetic components to place on PCB, Higher reliability and yields
UL Recognized Component: File # E330599

Material Specification:

Housing: PBT GF Black UL94V-0
Shield: 50u" Nickel over 0.20mm Thickness Brass
Insert: PA66 GF Black UL94V-0
Phosphor Bronze 0.35mm Thickness
Plating Area, 30u" gold over 50u" nickel
Solder Area, 100u" tin over 50u" nickel
RJ45 Contact pin: PA66 GF Black UL94V-0
Brass; 100u" Tinning
LED Conductor: PC Transparent UL94V-0

Mechanical Performance:

Contact resistance: 30 mΩ Maximum
Mating force: 5 lbs Maximum
Unmating force: 5 lbs Maximum
Operating life: 750 Cycles Minimum

Operating and Storage Temperature:

Operating Temperature Range: 0°C ~ +70°C
Storage Temperature Range: -40°C ~ +85°C

Address: No.16, Industrial Road Central, Industrial Zone, Xiaolan Town,
Zhongshan City, Guangdong Province, China
Tel: (021)64128995 https: //Ljq.hqelec.com

Mechanical Dimensions:

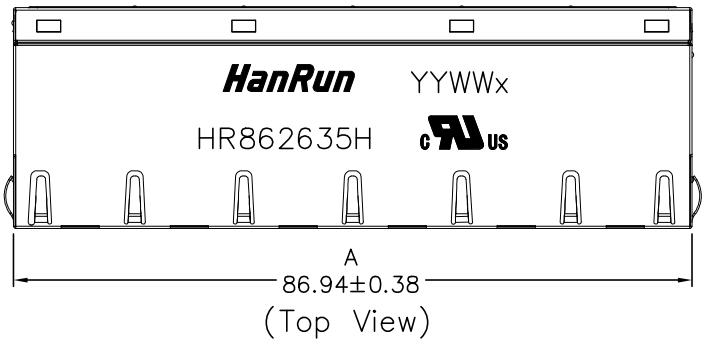

(Top View)

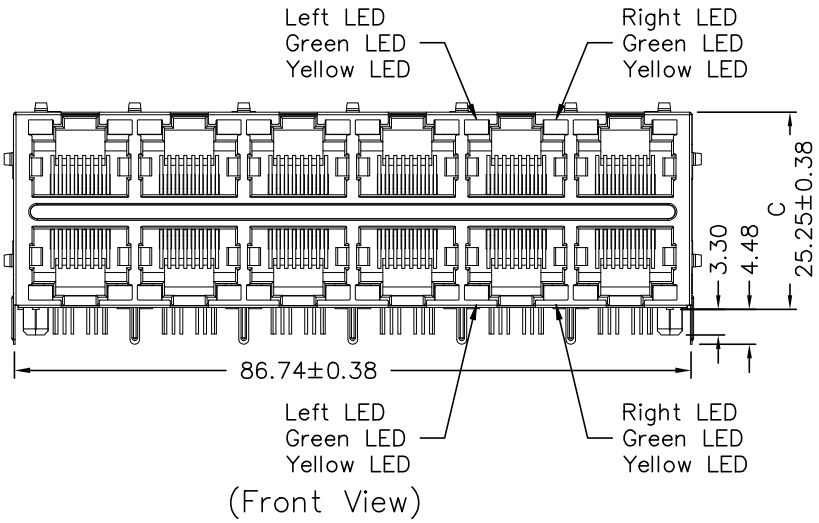

(Front View)

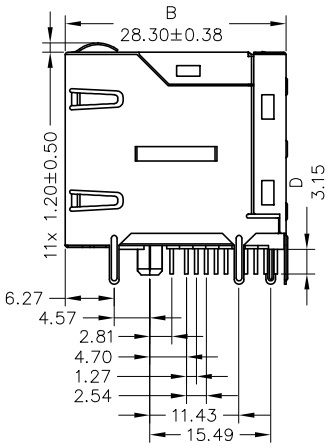

(Side View)

Standard LED	Wavelength	Forward V (Min/Max)	Forward A	Type
Green/Yellow	568nm/585nm	1.8V/2.8V	20mA	squareness

Dimensions in mm

Unless otherwise specified, Tolerance: .xx ±0.25

REV.: 04

Address: No.16, Industrial Road Central, Industrial Zone, Xiaolan Town,
Zhongshan City, Guangdong Province, China
Tel: (021)64128995 https: //Ljq.hqelec.com

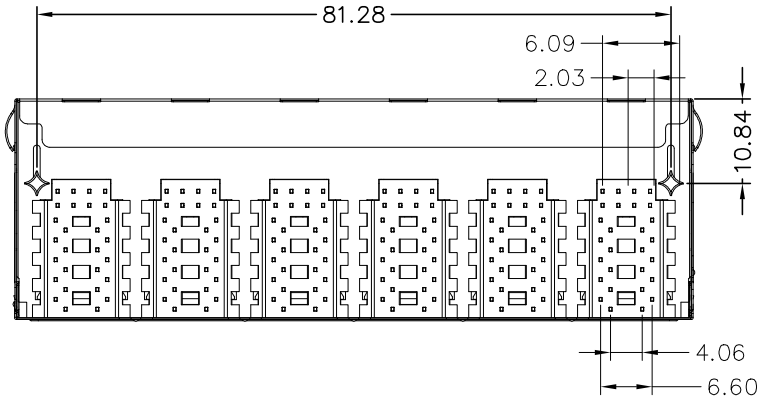

(Bottom View)

Suggested Panel Cutout:

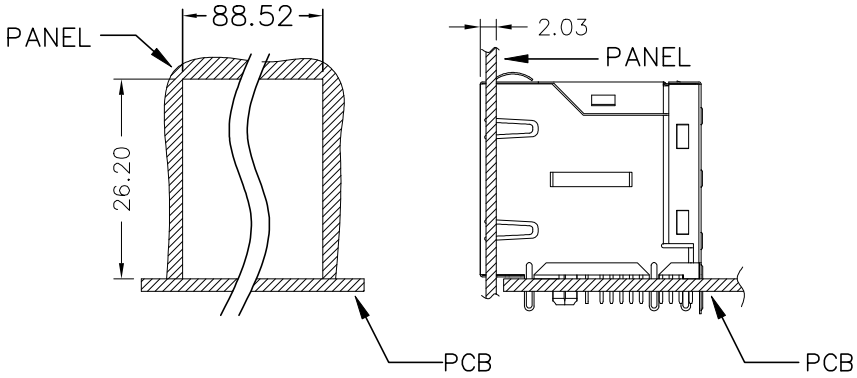

SUGGESTED PANEL CUTOUT

Dimensions in mm

Unless otherwise specified, Tolerance: .xx ±0.25

REV.: 04

Address: No.16, Industrial Road Central, Industrial Zone, Xiaolan Town,
Zhongshan City, Guangdong Province, China
Tel: (021)64128995 https: //Ljq.hqelec.com

PCB Layout:

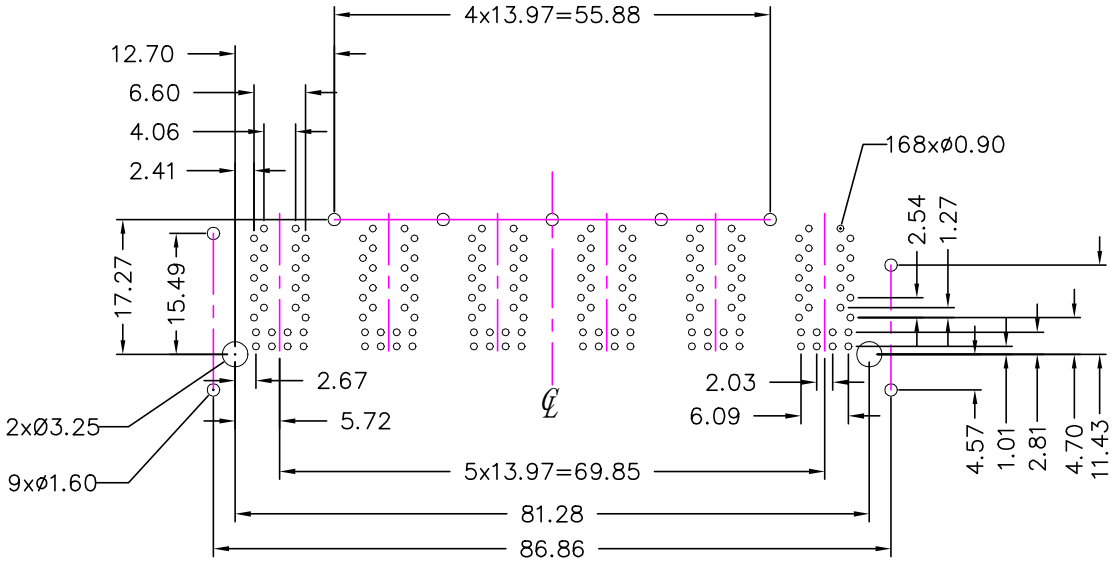

(Recommended PCB layout)

All dimension tolerance are ±0.08 unless otherwise specified

Pin Assignments:

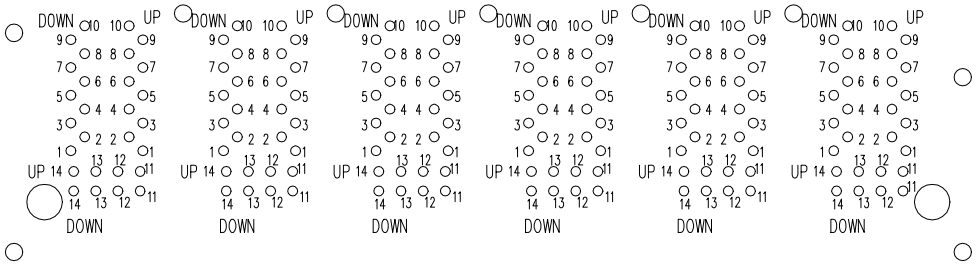

Dimensions in mm

Unless otherwise specified, Tolerance: .xx ±0.25

REV.: 04

Address: No.16, Industrial Road Central, Industrial Zone, Xiaolan Town,
Zhongshan City, Guangdong Province, China
Tel: (021)64128995 https: //Ljq.hqelec.com